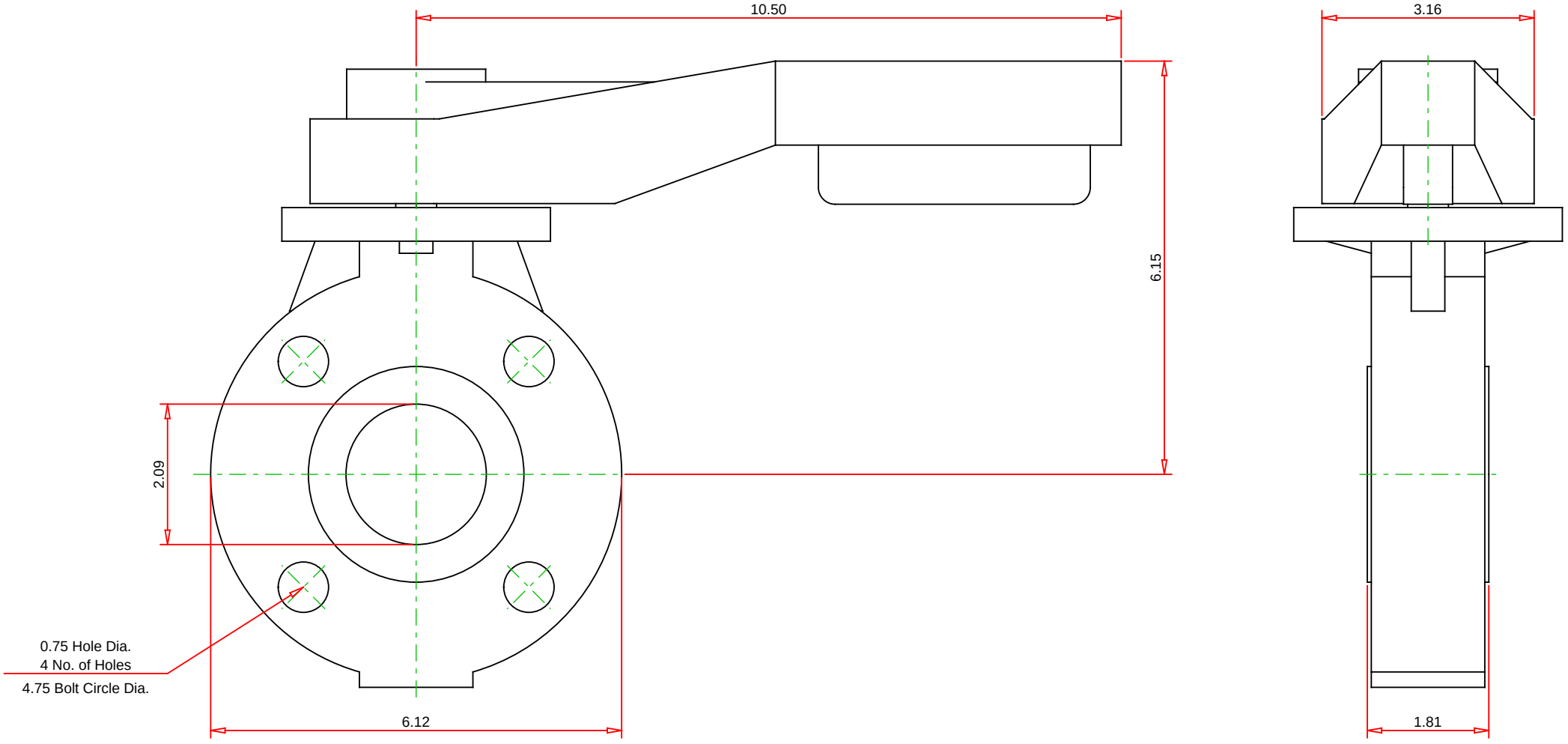

Note : - Drawing not to Scale
- Dimensions subject to change

Part No. :
BYV44020A0VL000

Description :
Butterfly Valves BYV Series - Lever , Body Material - GFPP , Disc Material - GFPP , Liner Material - Viton®

HAYWARD®

Hayward Flow Control
Address : One Hayward Industrial Drive
Clemmons, NC 27012, USA
Tel. : 1.888.429.4635
Email : hflowmktg@hayward.com
Web : http://www.haywardflowcontrol.com