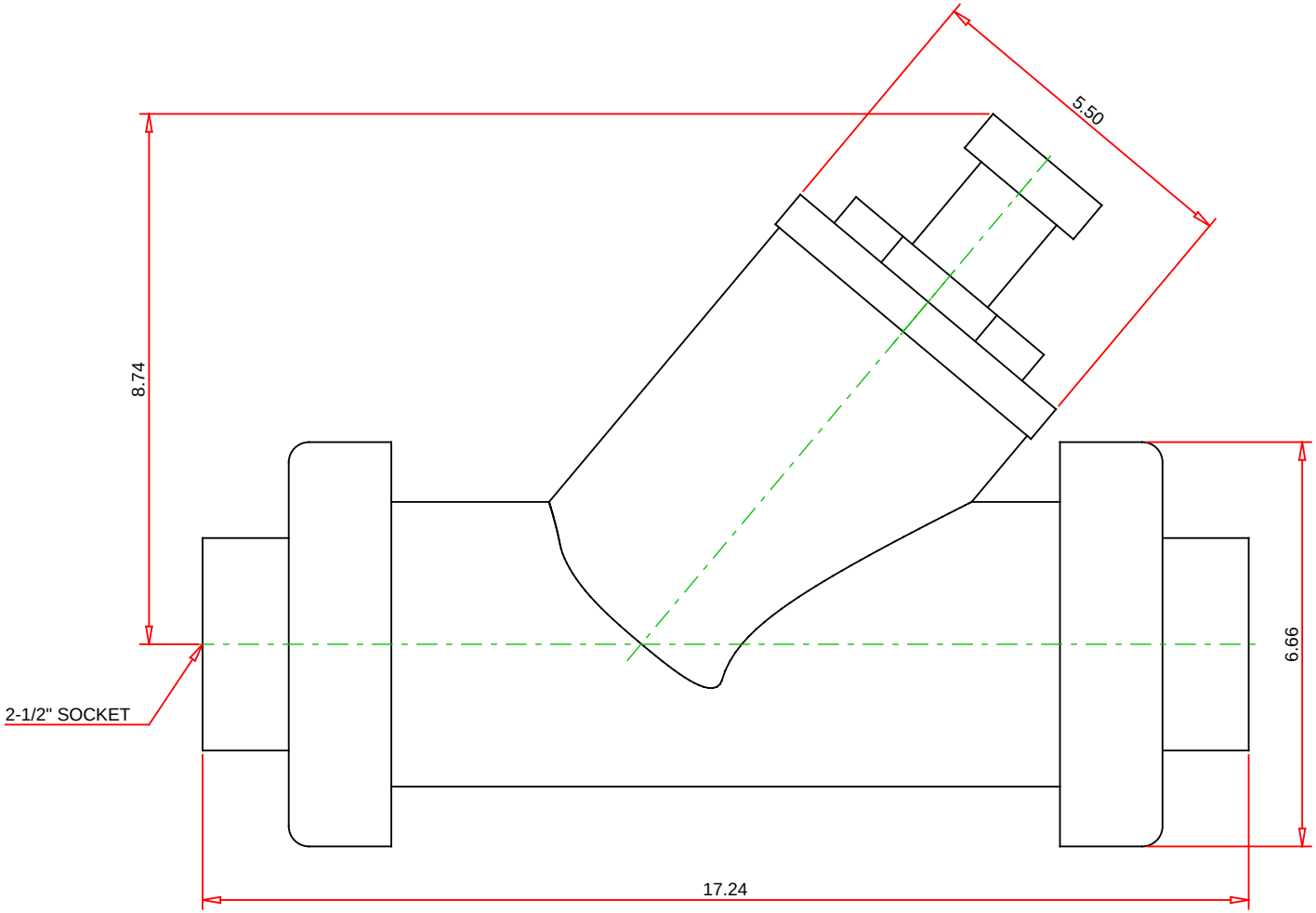

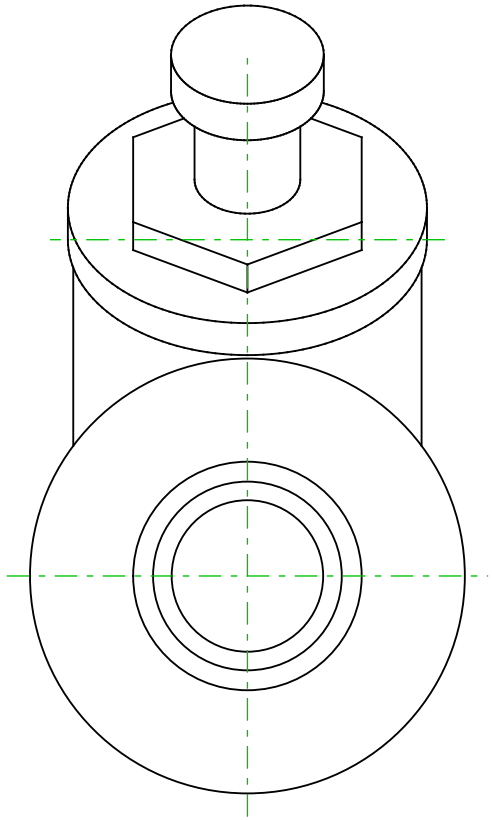

Note : - Drawing not to Scale
- Dimensions subject to change

Part No. :
SLC10250SU

Description :
2-1/2" PVC Spring-Loaded True Union Y-Check Valve w/FPM o-ring seal, socket end connections

HAYWARD®

Hayward Flow Control
Address : One Hayward Industrial Drive
Clemmons, NC 27012, USA
Tel. : 1.888.429.4635
Email : hflowmktg@hayward.com
Web : http://www.haywardflowcontrol.com