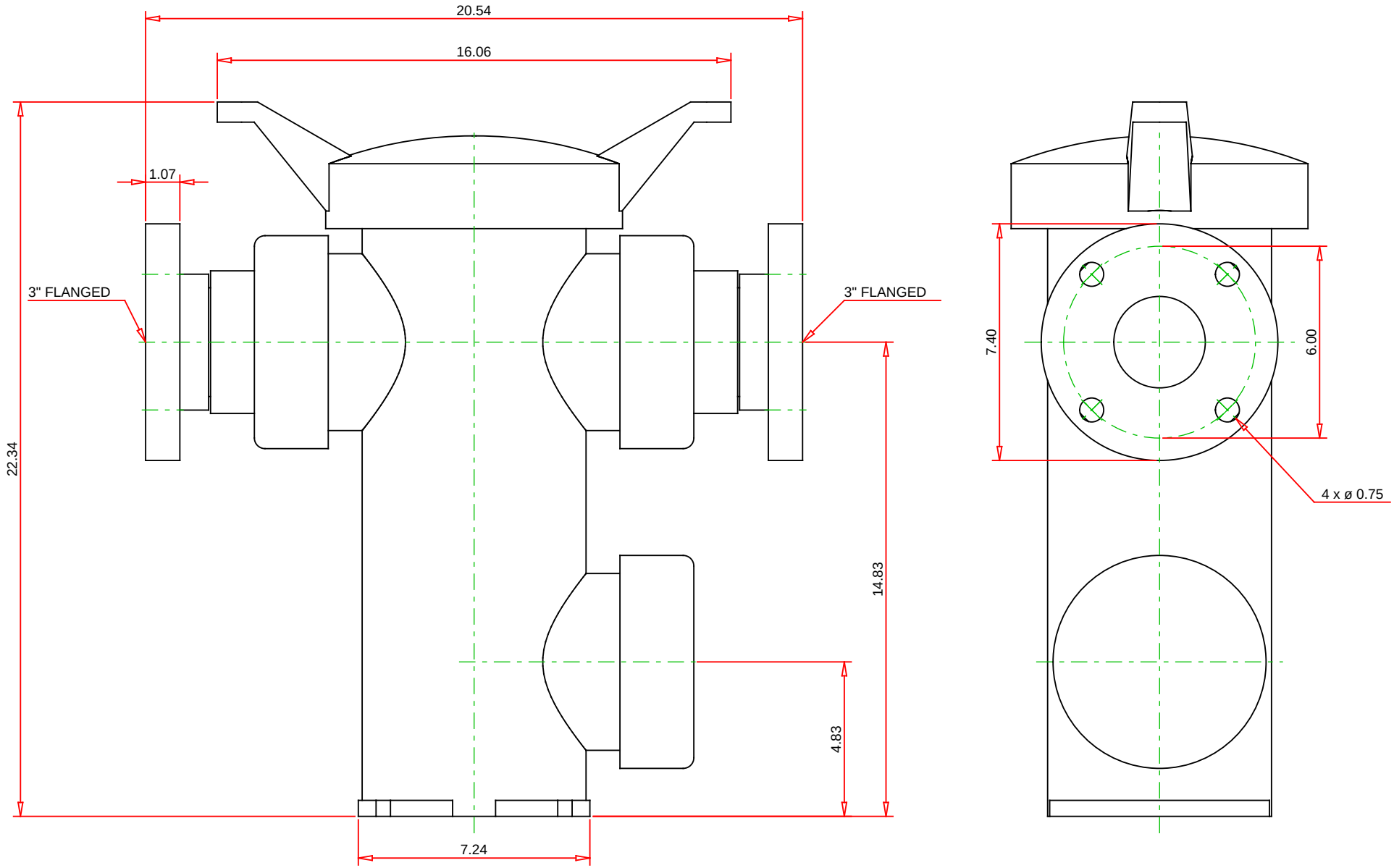

Note : - Drawing not to Scale
- Dimensions subject to change

Part No. :
SB1300F

Description :
3" PVC Simplex Basket Strainers w/FPM seal; flanged end connections

HAYWARD®

Hayward Flow Control
Address : One Hayward Industrial Drive
Clemmons, NC 27012, USA
Tel. : 1.888.429.4635
Email : hflowmktg@hayward.com
Web : http://www.haywardflowcontrol.com